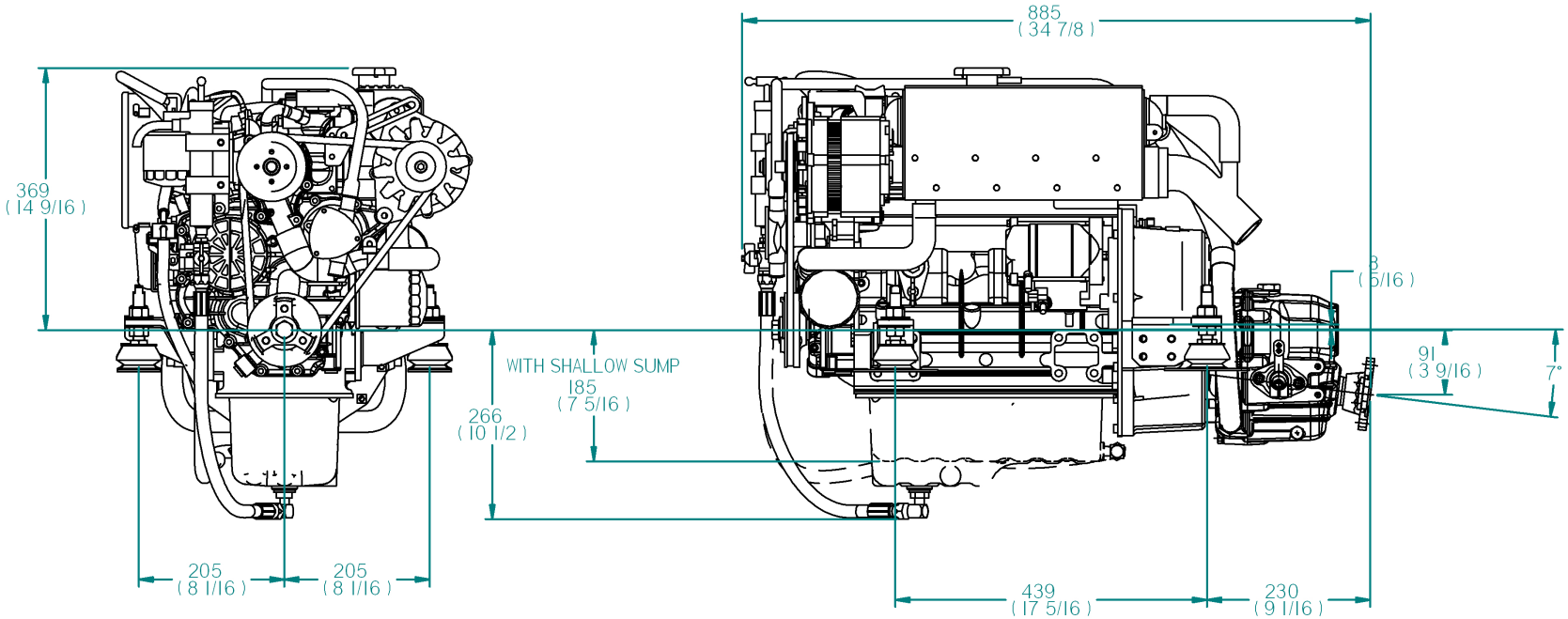

REV	DESCRIPTION	DATE	APP'D	DRAWN
01				

NOTES

TITLE:

BETA 35/38 HEAT EXCHANGE
TMC60A GEARBOX

DIMENSIONS IN MM (INCH)
DO NOT SCALE

PART FILE NAME: BV1305 HE tmc60a GEARBOX 100-09027.asm

BETA MARINE +1(206)8192439
INFO@BETAMARINEENGINES.COM WWW.BETAMARINEENGINES.COM

DRAWN BY:	SIZE	DWG NO:	REV
TW	A4	100-09027	01
CHECKED BY: LT	SCALE NTS	PAGE 1 of 1	DATE 13/09/2010