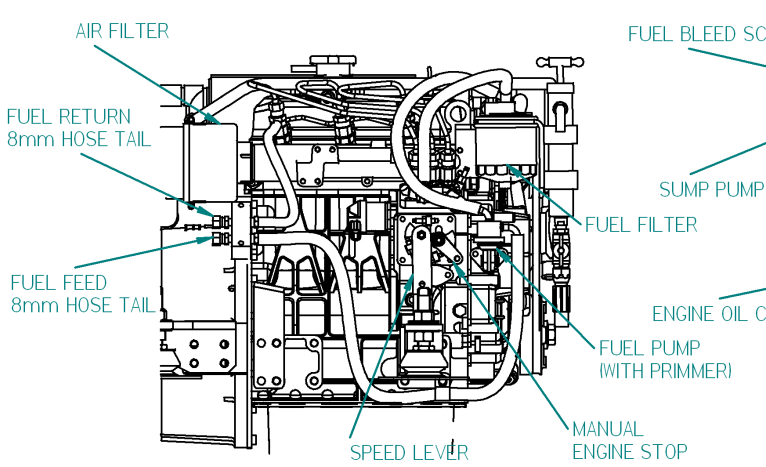

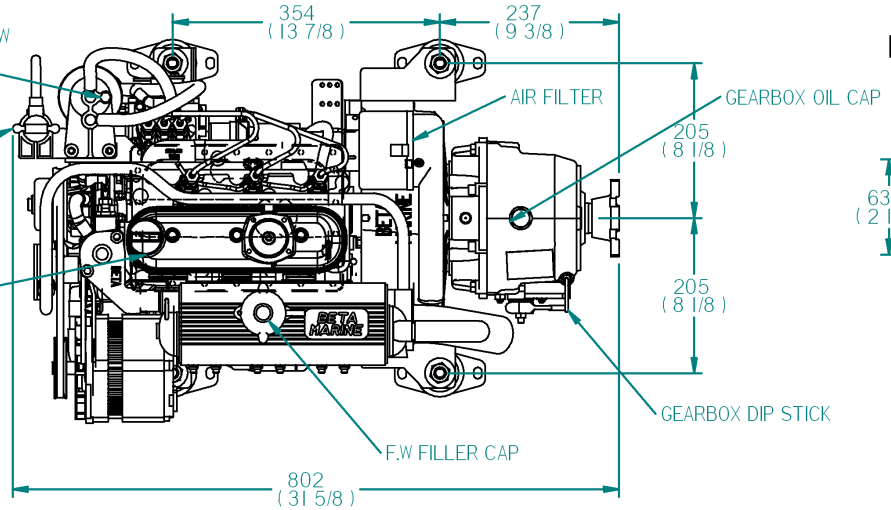

FLEXIBLE MOUNT DETAILS

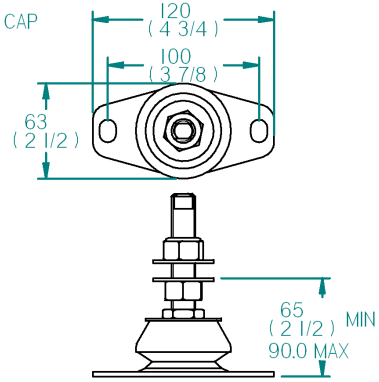

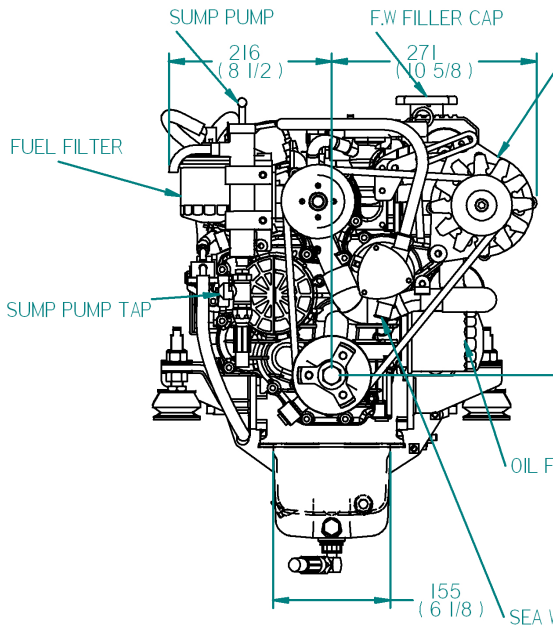

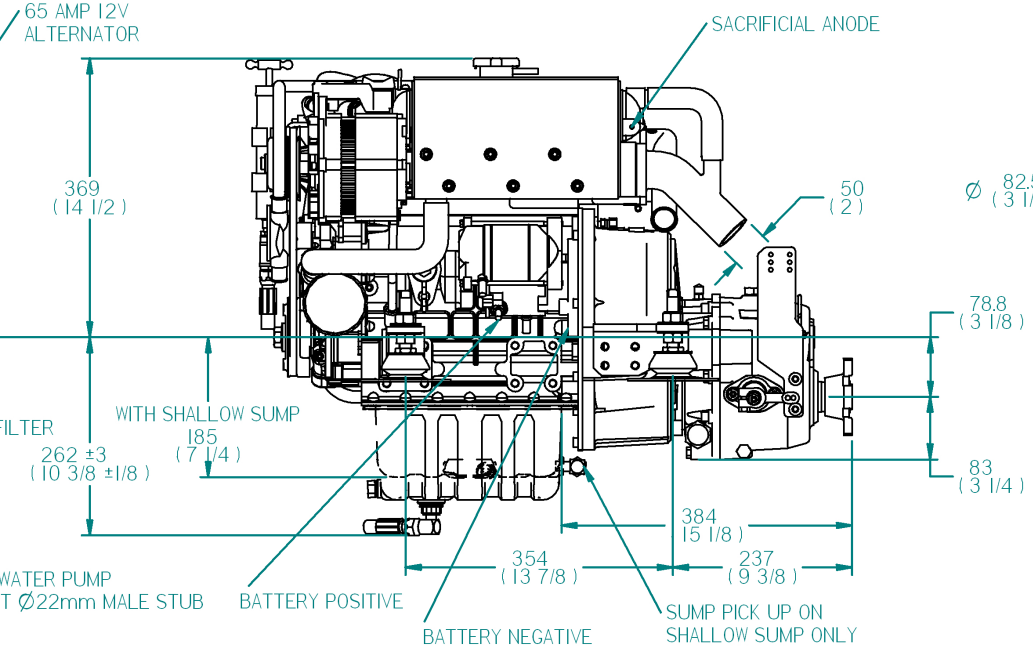

FLEXIBLE COULPING DETAILS

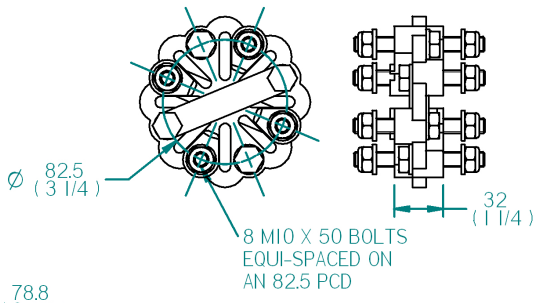

GEARBOX OUTPUT

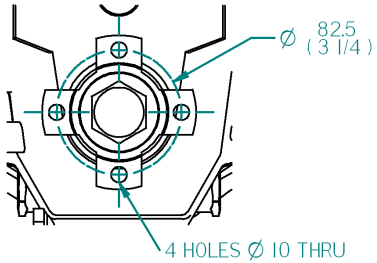

REV	DESCRIPTION	DATE	APP'D	DRAWN
01				

NOTES

TITLE:

BETA 30 HEAT EXCHANGE TMC60 GEARBOX

DIMENSIONS IN MM (INCH)
DO NOT SCALE

PART FILE NAME: BETA30 HE TMC60 100-08801.asm

BETA MARINE +1(206)8192439
INFO@BETAMARINEENGINES.COM WWW.BETAMARINEENGINES.COM

DRAWN BY:	SIZE	DWG NO:	REV
TW	A4	100-08801	00
CHECKED BY: LT	SCALE NTS	PAGE 1 of 2	DATE 10/11/2009